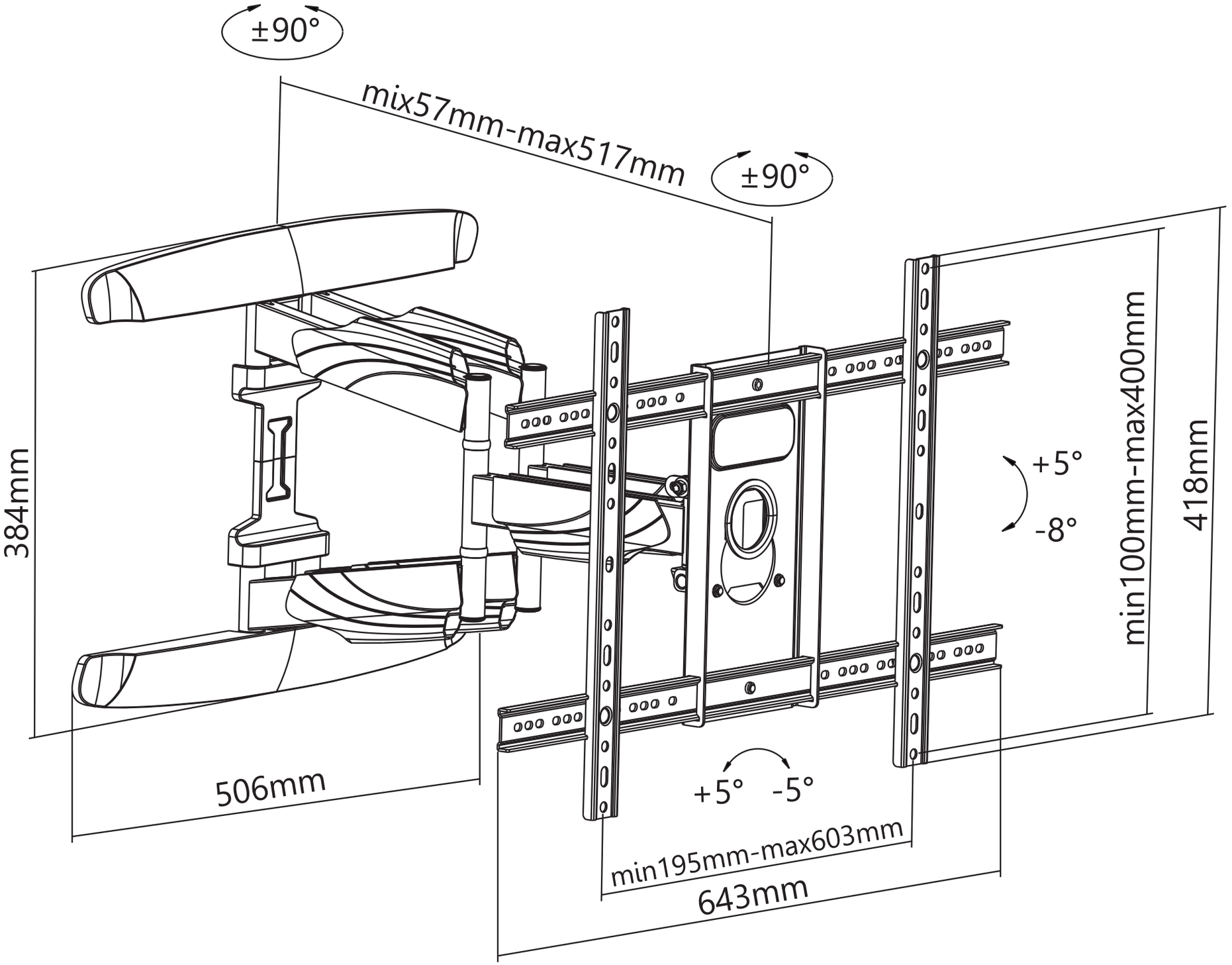
±90°
mix57mm-max517mm
±90°
384mm
506mm
+5°
-8°
min100mm-max400mm
418mm
+5°
-5°
min195mm-max603mm
643mm